MOTORS：AOS3220-1000KV

Technical Datas	
KV	1000
Configu-ration	12N14P
Stator Diamter	32
Stator Length	20mm
Shaft Diameter	5mm(Hollow)
Motor Dimension(Dia.*Len)	Φ39.4*36.25mm
Weight(g)	170g(3cm Wire)
Idle current(10)@10V(A)	2.3
No.of Cells(Lipo)	5-6S
Max Continuous Power(W)15S	2110
Internal Resistance	23mΩ
Max Current(15S)	87.9A
Max.Effciency Current	(6-13A)>86%



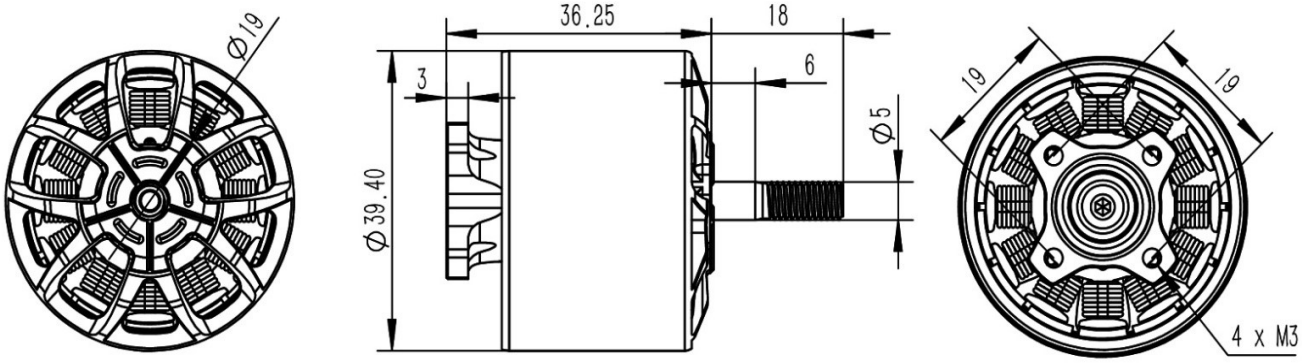

Prop（inch）	Voltages（V）	Throttle（%）	Load Currency（A）	Pull(g)	Power(W)	Efficiency(g/W)	Temperature(in full throttle load 15Sec)
HQ1050*3	24	30%	8.2	1125	196.8	5.716	85℃
		40%	16.3	1936	391.2	4.949	
		50%	27.6	2797	662.4	4.223	
		60%	40.4	3637	969.6	3.751	
		70%	57.9	4491	1389.6	3.232	
		80%	76.9	5272	1845.6	2.857	
		90%	84.2	5442	2020.8	2.693	
		100%	87.9	5735	2109.6	2.719	
GF1050*3	24	30%	7.5	1036	180.0	5.756	83℃
		40%	15.6	1900	374.4	5.075	
		50%	25.3	2702	607.2	4.450	
		60%	37.6	3525	902.4	3.906	
		70%	52.4	4356	1257.6	3.464	
		80%	71.5	5173	1716.0	3.015	
		90%	78.2	5410	1876.8	2.883	
		100%	83.9	5746	2013.6	2.854	

☐Airplane	☐Helicopter	■Vtol